INSTALLATION INSTRUCTIONS FOR HIDDEN DOOR CLOSER

All work must be carried out in accordance with health and safety regulations and construction best practices by qualified personnel.

Solution available only for doors with:

- THERMO HOT 78 and THERMO HOT 88 aluminum door frames, and
- factory-prepared mounting holes.

The instructions include the method for attaching the arm and adjusting the door closer.

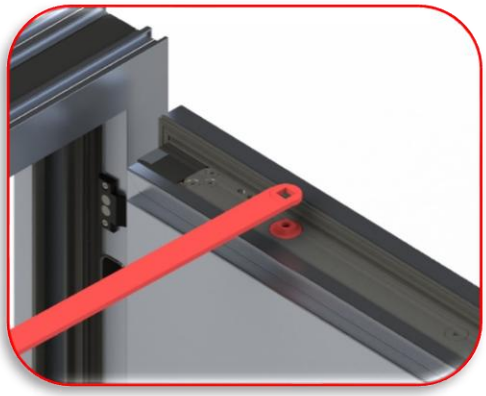

1. Attach the closer arm to the square-head bolt. WARNING! Ensure that the product matches the door's opening direction ("R" for right-hand doors, "L" for left-hand doors). The square hole in the arm is angled to help pull the door leaf against the frame when closed.

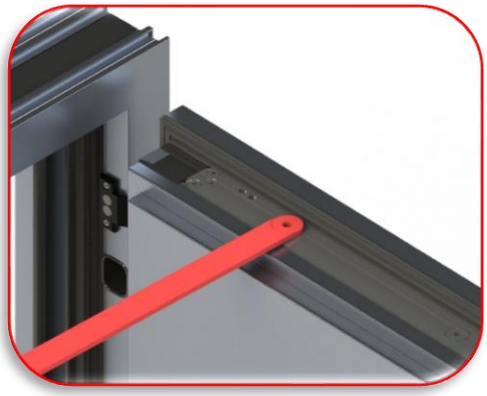

2. Position the arm as shown in the diagram. The mechanism should remain un-tensioned, with the arm at a 90-degree angle to the door leaf.

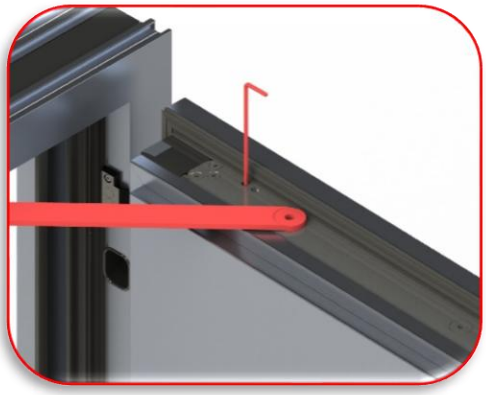

3. Pull the closer arm toward the door frame, then use an Allen key to tighten the valve on the closing mechanism to lock it in place.
4. Remove the closer arm after the mechanism is locked.

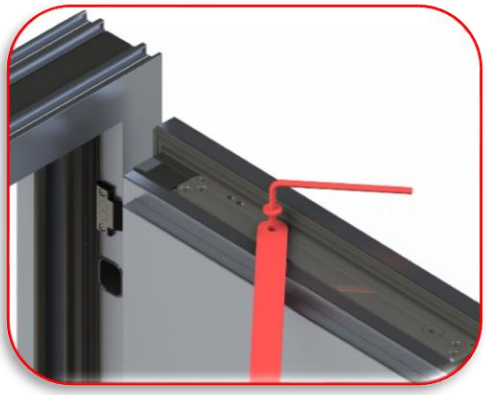

5. Reattach the arm according to the diagram. Adjust its position so that when the valve is loosened, the arm aligns parallel to the door leaf. WARNING! The arm is directional (the "R" or "L" marking should always be visible from the top when installed correctly). Incorrect installation will cause the door leaf to be pushed outward upon closing.

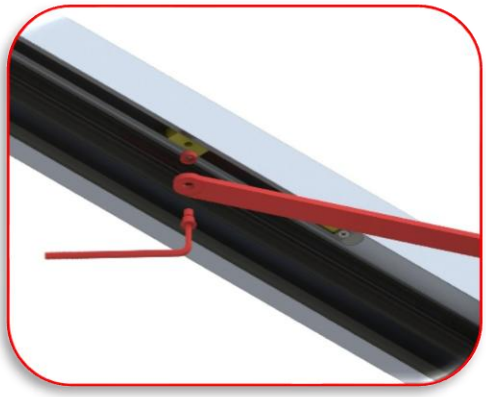

6. Secure the arm to the slider inside the rail mounted on the door frame. The use of a spacer washer depends on the door adjustment.
   The set includes an optional spacer washer, which can be used in case of: a large gap between the door leaf and the frame and the closer arm rubbing against the frame.

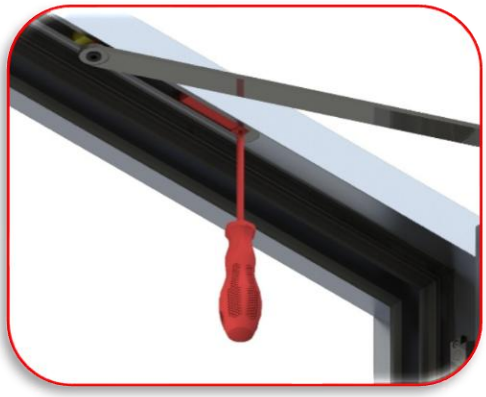

7. Adjust the door opening limiter according to individual preferences. The factory-installed limiter also allows the door leaf position to be locked.
   The set includes a rubber bumper (see diagram), which does not block the door from closing but absorbs sudden door openings. Limiters should be used alternately, not simultaneously.

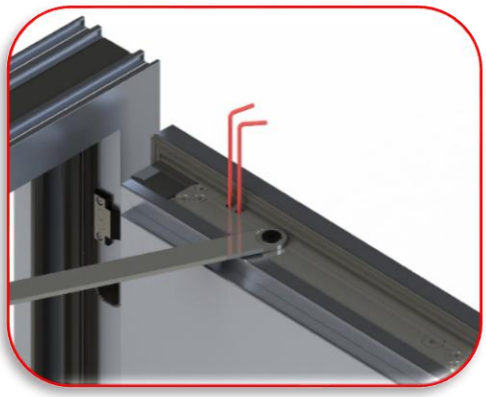

8. Use an Allen key to adjust the closing speed in the following ranges: 120° – 15° and 15° – 0°.
   The closer features an internal valve that reduces the force required to open the door (opening assistance function), which cannot be adjusted.

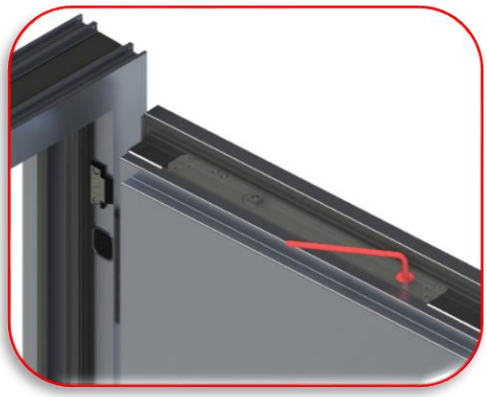

9. Use an Allen key to adjust the closing force according to the door leaf size.